COPAL 37mm Gear Motor HG37 Series 120:1 Ratio

Case	:Metal
Bearing	:Sleeve Bearing
Operating Temp	:0°C~50°C
Rotation	:CW, CCW
Net Weight	:155g

- Resin gears for quiet operation
- Planetary gearbox
- Special configurations available upon request
- **RoHS Compliant**

Model	Rated Voltage (DC)	Operating Voltage (DC)	Rated Current (mA)	Stall Current (mA)	Rated Torque		Stall Torque		Rated Speed (rpm)	No Load Speed (rpm)
					oz-in	N-cm	oz-in	N-cm		
HG37-120-AA	12	10.8~13.2	350	1500	55.5	39.2	208	147	33	41
HG37-120-AB	24	21.6~26.4	200	750						

■ OUTLINE DIMENSIONS

(Unit: mm)

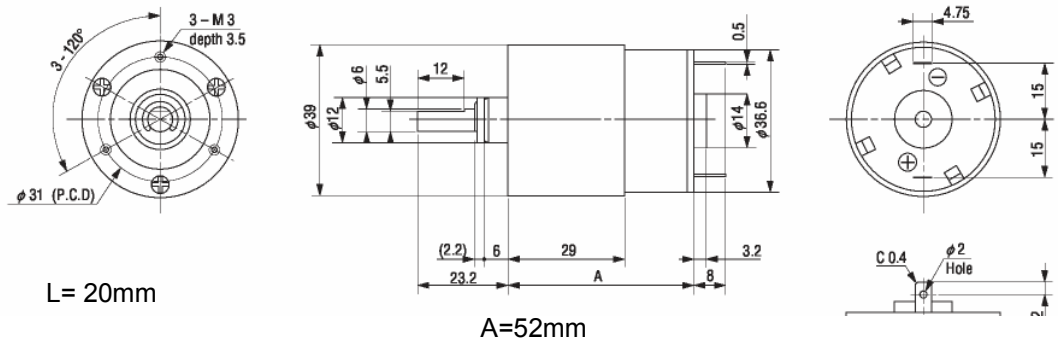

L= 20mm

A=52mm

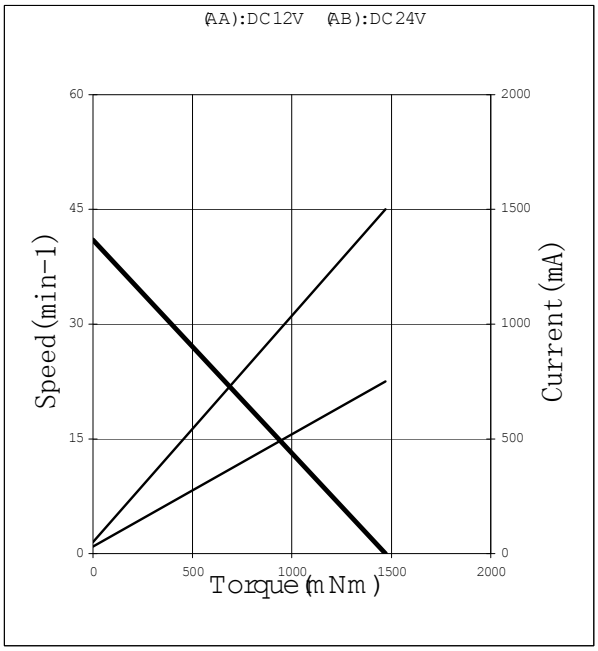

Nidec Copal (U.S.A.) Corp.
373 Van Ness Ave Suite 130
Torrance, CA 90501
Tel: (310) 782-6102
Fax: (310) 782-6821
www.nidec-copal-usa.com
info@nidec-copal-usa.com

Version 42808